DIGITAL AMBIENT NOISE CONTROLLER

DP-L2

DESCRIPTION

TOA's DP-L2 is a rack-mountable digital audio processor with an ambient noise control (ANC) function that automatically adjusts output volume in response to changing ambient noise levels. Typical applications would include airports, stations and shopping malls, as well as restaurants and pubs.

Conventional ambient noise controllers simply add the output to the ambient noise, making manual compensatory adjustments necessary. The DP-L2 features an automatic level control (ALC) function that automatically adjusts the input signal to keep it at a level suitable for the surrounding ambient noise level, thus ensuring an appropriate input signal level at all times.

The DP-L2 has 2 x Input 2 x Output, 1 x Ambient Noise Sensor Microphone Input and 1 x Monitor Output connectors. A range of microphones may be used for detecting ambient noise, including ceiling flush-mounted, dynamic and condenser types. Easy setting of all functions can be made right at the unit, thanks to keys and knobs and an LCD (liquid crystal display) which are all front-mounted. A protect function prevents accidental changes in front-panel key settings. In addition, front-mounted LED meters are provided for the input, output, ALC and ANC levels.

FEATURES

- Digital ambient noise control (ANC) function with 4-LED metering automatically makes adjustments to output gain to match changes in ambient noise levels.
- Exclusive TOA feature distinguishes unit output sound level from ambient noise levels, for more accurate automatic noise control.
- Monitoring output of sound picked up by the ambient noise sensor microphone.
- Automatic level control feature with 4-LED metering maintains input signal at a constant level by adjusting input signals to appropriate levels when the sound level is too low. Sound volume is controlled without losing nuances of speech or compromising background music sound quality. This prevents the sort of unnatural sound that often results when an AGC or a compressor is used.
- Maximum Output function acts as a limiter. It should be set to the rated input of the equipment to which the DP-L12's outputs are connected.
- Sensor input reference level fine adjustment function.
- Sensor input phantom power switch.
- 8-LED input and output level metering on front panel.
- Auto input sensitivity setting and sensor input reference level measuring.
- The LCD screen, keys and knobs are all located on the front panel, ensuring easy operation of all settings.
- A built-in key lock function protects against accidental mistakes in front-panel key settings.
- Standard 1U-size (44.5mm/19-inch) rack-mountable for easier and quicker installation.
- Pre-coated black steel plate finish.

TOA

CONNECTION EXAMPLES

When broadcasting is done via a microphone while BGM is on

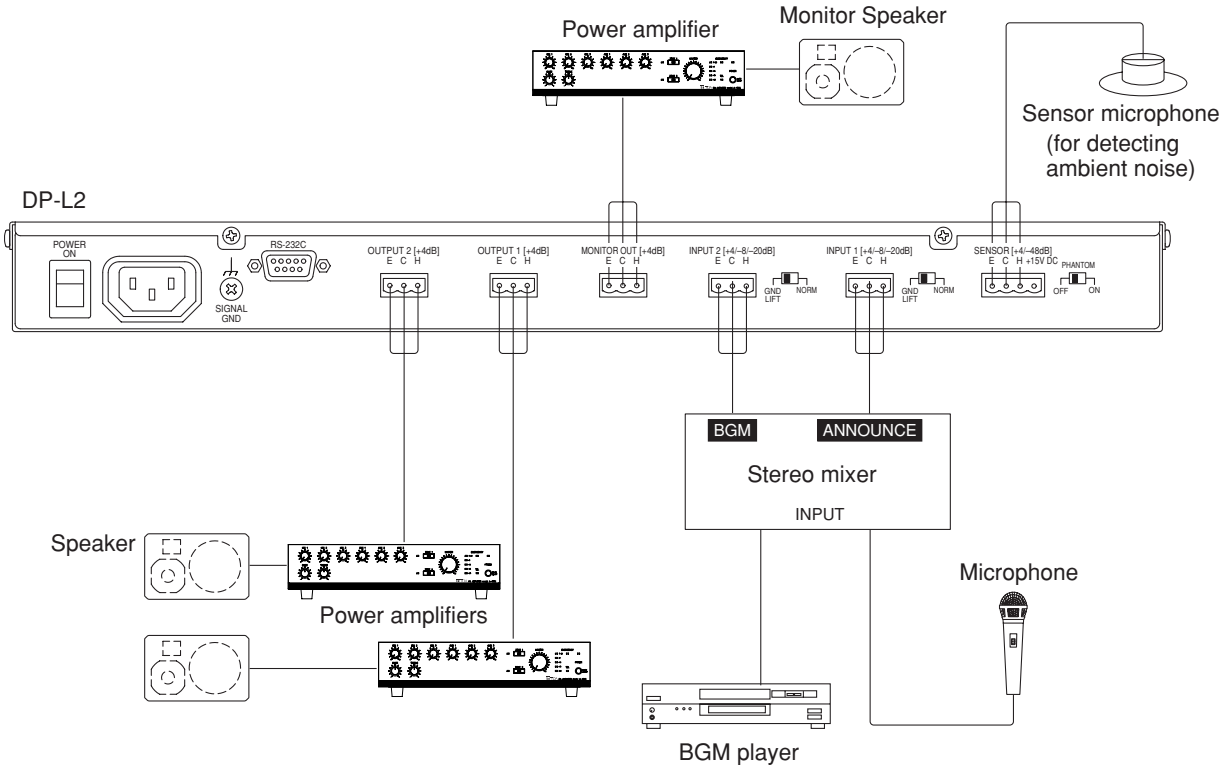

When broadcasting BGM in stereo

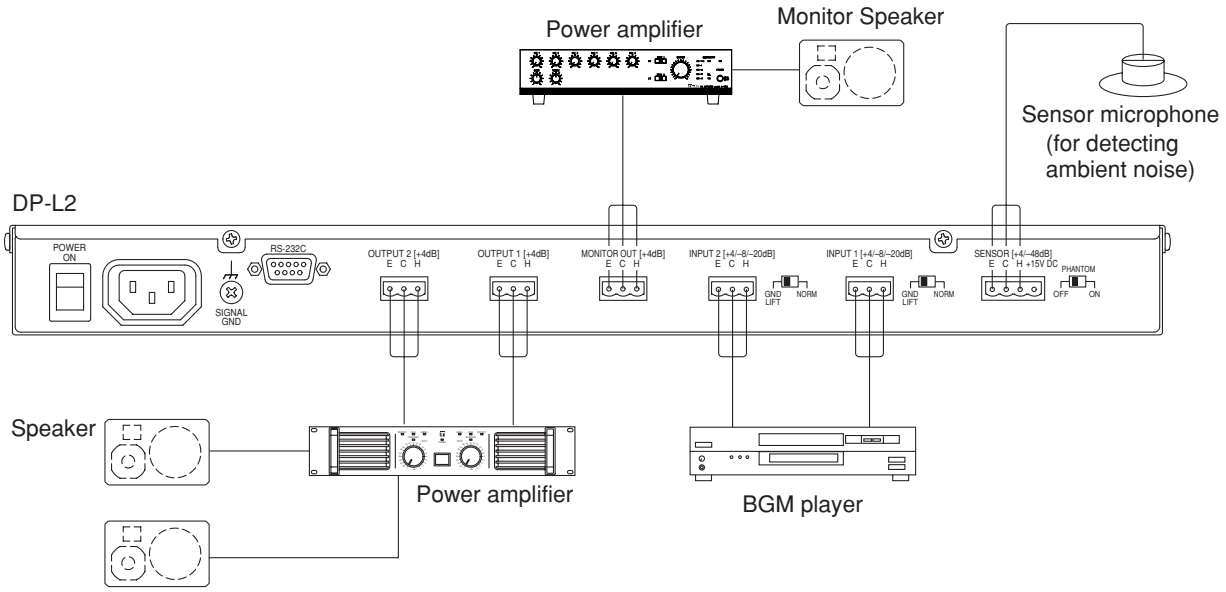

BLOCK DIAGRAM

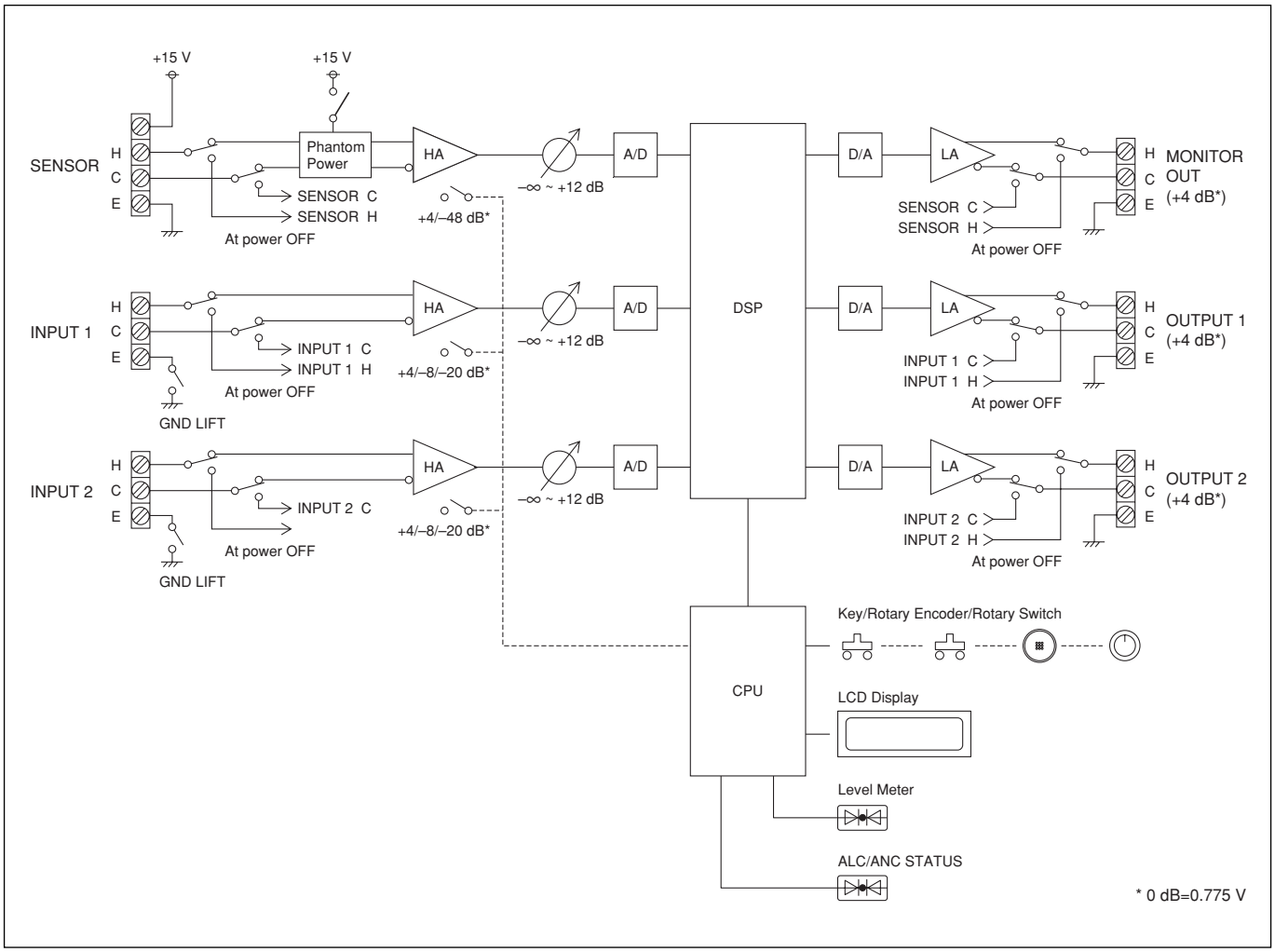

APPEARANCE (DP-L2 CU)

SPECIFICATIONS

* 0dB = 0.775 V

		DP-L2
Power Source		AC mains, 50/60Hz
Power Consumption		20W
Frequency Response		48kHz
Sampling Frequency		20 — 20,000Hz, ±1dB
Dynamic Range		Over 108dB (IHF-A weighted)
Distortion		Under 0.006%, 1kHz, +4dB* input/output (20 — 20,000Hz BPF)
Input		Sensor input (Ambient noise sensor microphone input): +4/–48dB* changeable, 10kΩ, electronically-balanced, removable terminal block (4 pins), phantom power (+15V DC, can be turned on or off with Phantom switch) with +15V DC terminal Input 1, 2: +4/–8/–20dB* changeable, 15kΩ, electronically-balanced, removable terminal block (3 pins)
Output		Monitor output:+4dB*, 600Ω, electronically-balanced, removable terminal block (3 pins) Output 1, 2: +4dB*, 600Ω, electronically-balanced, removable terminal block (3 pins)
A/D Converter		24 bit
D/A Converter		24 bit
Signal Processing	Automatic Level Control Function	Level meter (4 LED meters), Automatic input signal level control function. Automatic input sensitivity setting function: +4/–8/–20dB*, Noise gate level setting: –99 to –3dB
	Ambient Noise Control Function	Level meter (4 LED meters). BGM/Announce level control function, Automatic sensor input reference level measuring function, Sensor input reference level fine adjustment function, Maximum output signal level control: –15 to 0dB, Minimum output signal level control: –18 to –3dB, Sample time setting: 10 s, 20 s, 30 s, 1 min, 5 min Gain ratio setting (Ambient noise; Output signal level) 6: 3, 5: 3, 4: 3, 3: 3, 3: 4, 3: 5, 3:6, Ambient noise measuring frequency setting: 20 — 20,000Hz, 3 points
	Maximum Output Signal Level Control Function	–12, –6, 0, +4, +6, +12, +18, +24dB*
	Input Level Indicator	8 LEDs indicator
	Output Level Indicator	8 LEDs indicator
Other Feature		Phantom power switch (sensor input), Key lock function, Ground lift switch (INPUT 1, INPUT 2), Input/Output bypass function in power off
Operating Temperature		O°C to +40°C
Operating Humidity		Under 90% RH (no condensation)
Finish		Pre-coated steel plate, black, 30% gloss
Dimensions		482 (W) × 44 (H) × 303 D)mm
Weight		3.7kg
Accessory		Power cord (2m) × 1, Removable terminal plug (4 pins) ×1, Removable terminal plug (3 pins) × 5

Note: Prepare ambient noise sensor microphone separately.

APPEARANCE AND DIMENSIONAL DIAGRAM

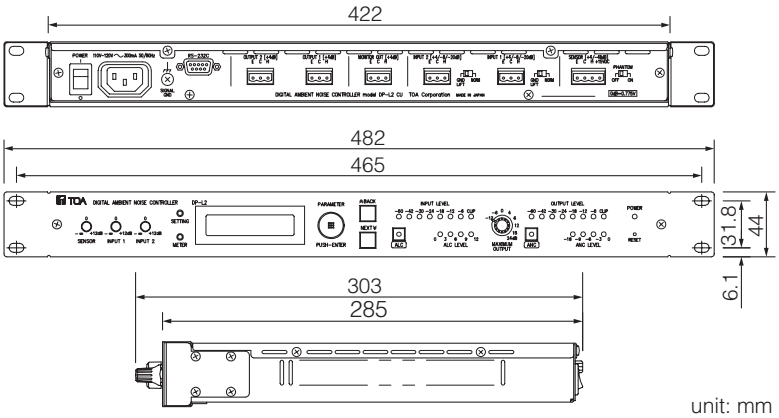

unit: mm

TOA Corporation

URL : www.toa.jp/

Specifications are subject to change without notice.
Printed in Japan (0506) 833--- U