TOA

INSTRUCTION MANUAL

VIDEO DISTRIBUTOR C-VD6

The C-VD6 is a video distributor for use in color or black and white camera systems.
It distributes 1 video signal to 6 outputs, or 2 different video signals to each of 3 outputs.

HANDLING PRECAUTIONS

- Avoid locations where the unit is exposed to sunlight or heating device because this may badly influence the unit's case or components.
- Do not place the unit in humid or dusty locations. If water gets into the units, electrical shocks or damage to the unit may result.
- Never disassemble nor insert any metal objects into the units, nor touch any of its internal components because this may result in electrical shocks or damage to the unit.
- Wipe down with a soft cloth when cleaning. Never use such volatile liquids as thinner and benzine because the unit's finish or surface may be discolored or deformed.
- Always take hold of the plug when removing the power cable from the AC outlet. To avoid electrical shocks and fire, never use a damaged power cable.
- To prevent an accident, leave the unit unplugged when it is not used for over two weeks.

NOMENCLATURE AND FUNCTION

【Front-mounted facilities】

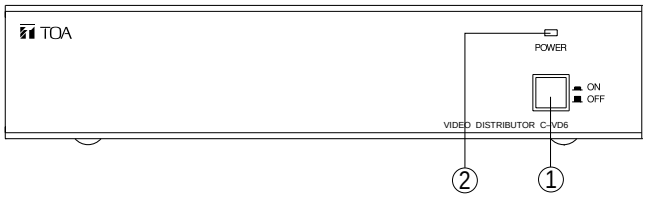

【Rear-mounted facilities】

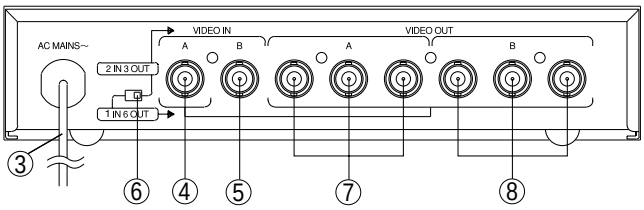

① **Power switch** (POWER ON ▬ / OFF ▙)
To turn power on, press the switch.
Press it again to turn power off.

② **Power indicator lamp**

③ **AC cable**

④ **Input connector (A)** (VIDEO IN A)

⑤ **Input connector (B)** (VIDEO IN B)

⑥ **Input selector switch** (2 IN 3 OUT/ 1 IN 6 OUT)
Set to the 1 IN 6 OUT position if 6 outputs are needed. Shift the switch back to 2 IN 3 OUT if 2 different camera inputs are used.

⑦ **Output connector (A)** (VIDEO IN A)

⑧ **Output connector (B)** (VIDEO IN B)
In the event of 1 input and 6 outputs, the input A signal is distributed to both outputs A and B. When 2 input signals are distributed to each of 3 outputs, the input A signal appears at output A, with the input B signal distributed to output B.

CONNECTION

- **For 1 input/ 6 outputs**

Set to the **"1 IN 6 OUT"** position.

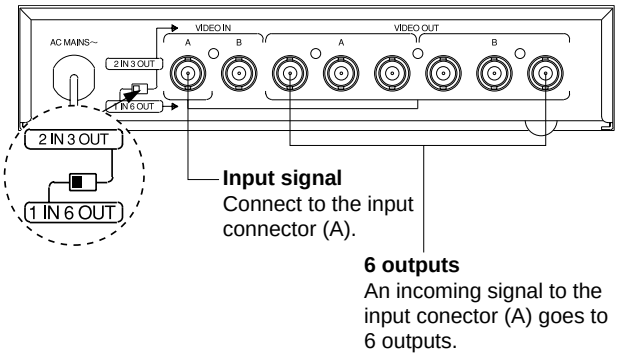

- **For 2 pairs of input/ 3 outputs**

Set to the **"2 IN 3 OUT"** position.

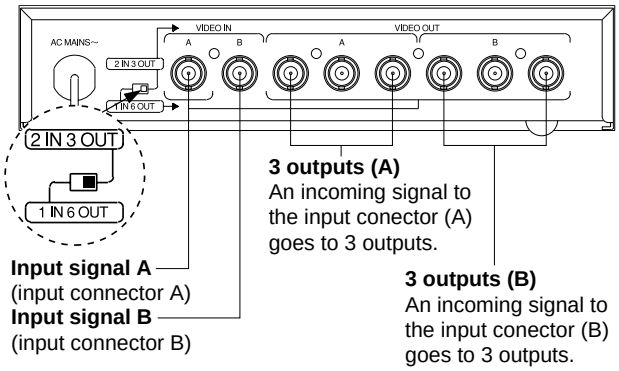

RACK MOUNTING

When mounting the unit in an equipment rack, use the optional mounting bracket set and remove the rubber feet installed on the underside of the unit.

- **Rack-mounting a single unit**
  (using the optional MB-15B-BK mounting bracket set)

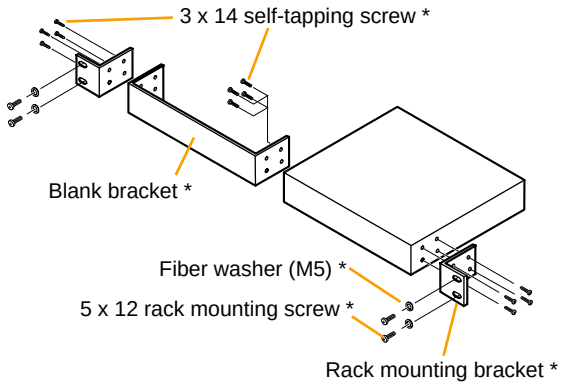

* Parts included with the MB-15B-BK mounting bracket set.

- **Rack-mounting two units**
  (using the optional MB-15B-J mounting bracket set)

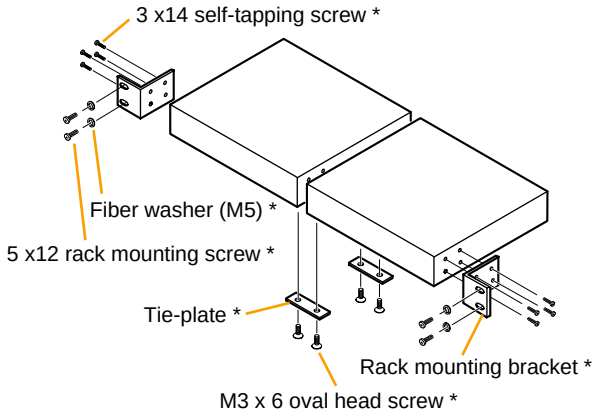

* Parts included with the MB-15B-J mounting bracket set.

SPECIFICATIONS

Power Source	230 V AC 50/ 60 Hz
Power Consumption	4.5 W (5.4 VA)
Video Input	2 inputs, 1.0 V(p-p), 75Ω, BNC
Video Output	6 outputs, 1.0 V(p-p), 75Ω, BNC
Distribution	1 IN – 6 OUT, or 2 IN – each of 3 OUT, swichable
Operating Temperature	−10°C to +50°C
Finish	Panel : Aluminum, black, 30% gloss Case : Pre-coated steel plate, black, 30% gloss
Dimensions	210 (W) x 46 (H) x 296 (D) mm
Weight	2 kg

* Product specifications and external design are subject to change without notice.

- **Optional products**

Rack mounting bracket: MB-15B-BK (for rack mounting one C-VD6 unit)
Rack mounting bracket: MB-15B-J (for rack mounting two C-VD6 units)

TOA Corporation

Printed in Japan
133-12-473-8A